Uni-directional ESD Diode
TGESD24VD5

Features

- ESD / transient protection of high speed data lines
  - IEC 61000-4-2 (ESD): ±30 kV (air), ±30 kV (contact)
- Working voltage: V_{RWM} = 24V
- Low leakage current
- Low clamping voltage
- RoHS compliant with Halogen-free
- Qualified to AEC-Q101 Standards

HF

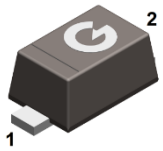

SOD-523

Mechanical Data

- Case: SOD-523
- Molding Compound: UL Flammability Classification Rating 94V-0
- Terminals: Matte tin-plated leads; solderability-per MIL-STD-202, Method 208

Ordering Information

Part Number	Package	Shipping Quantity	Marking Code
TGESD24VD5	SOD-523	3000 pcs / Tape & Reel	24

Maximum Ratings (@ T_A = 25°C unless otherwise specified)

Parameter	Symbol	Value	Unit
IEC 61000-4-2; ESD (Air)	V_{ESD-A}	±30	kV
IEC 61000-4-2; ESD (Contact)	V_{ESD-C}	±30	kV
Peak Pulse Power (t_p = 8/20μs)	P_{PP}	300	W
Peak Pulse Current (t_p = 8/20μs)	I_{PP}	6	A

Thermal Characteristics

Parameter	Symbol	Value	Unit
Thermal Resistance Junction-to-Air *1	$R_{\theta JA}$	240	°C/W
Thermal Resistance Junction-to-Case *1	$R_{\theta JC}$	165	°C/W
Thermal Resistance Junction-to-Lead *1	$R_{\theta JL}$	180	°C/W
Operating Junction Temperature Range	T_J	-55 ~ +150	°C
Storage Temperature Range	T_{STG}	-55 ~ +150	°C

Note 1: The data tested by surface mounted on a 1 inch^2 FR-4 board with 2OZ copper

Electrical Characteristics (@ T_A = 25°C unless otherwise specified)

Symbol	Parameter	Test Condition	Min.	Typ.	Max.	Unit
V_{RWM}	Reverse Stand-off Voltage		-	-	24	V
V_{BR}	Reverse Breakdown Voltage	I_T = 5mA	26.5	-	30	V
I_R	Reverse Leakage Current	V_{RWM} = 24V	-	-	0.05	μA
V_C	Clamping Voltage	I_{PP} = 1A, t_p = 8/20μs	-	34	40	V
		I_{PP} = 6A, t_p = 8/20μs	-	45	70	V
C_J	Junction Capacitance	V_R = 0V, f = 1.0MHz	-	50	55	pF

Ratings and Characteristics Curves (@ T_A = 25°C unless otherwise specified)

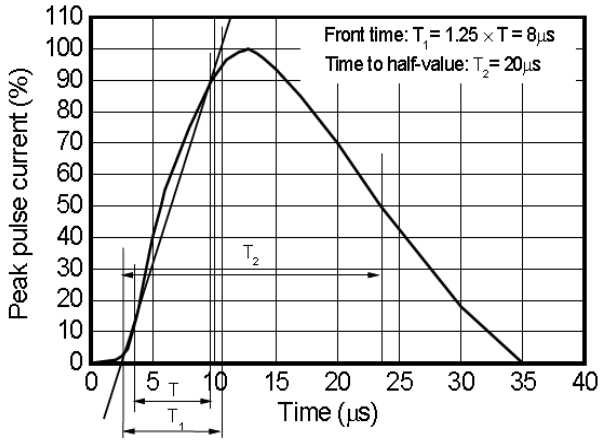

Fig 1 8/2 0μs waveform per IEC61000-4-5

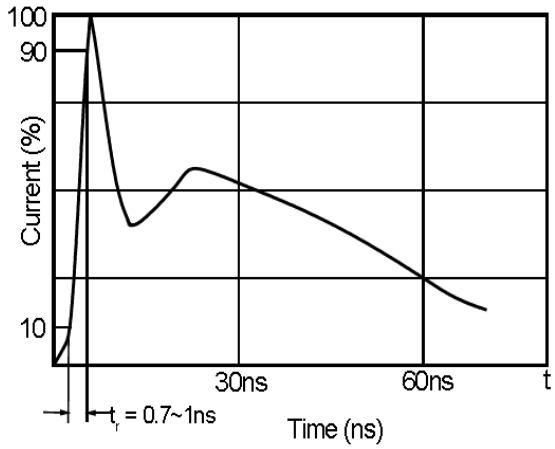

Fig 2 ESD pulse waveform according to IEC61000-4-2

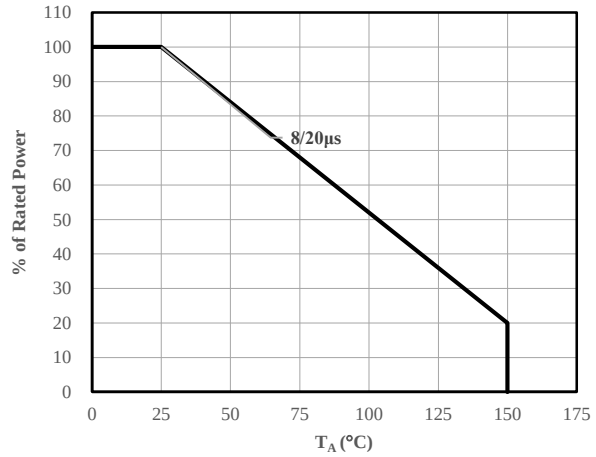

Fig 3 Power Derating Curve

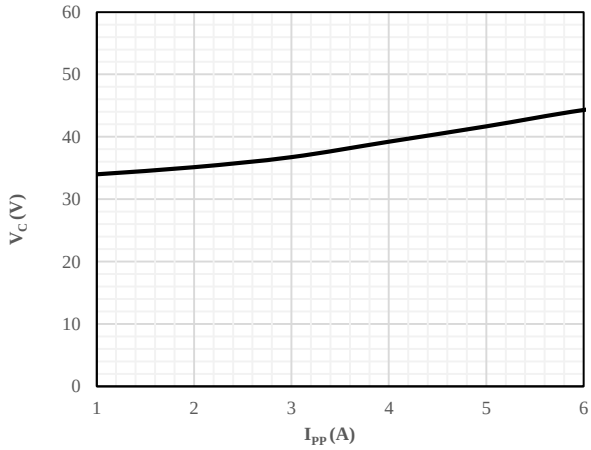

Fig 4 Clamping Voltage vs. Peak Pulse Current

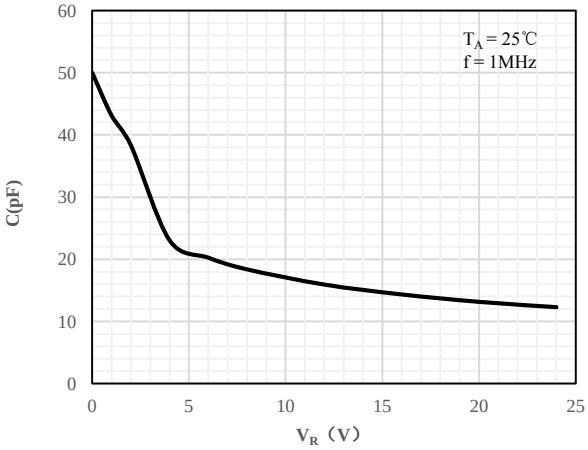

Fig 5 Junction Capacitance vs. Reverse Voltage

Package Outline Dimensions (Unit: mm)

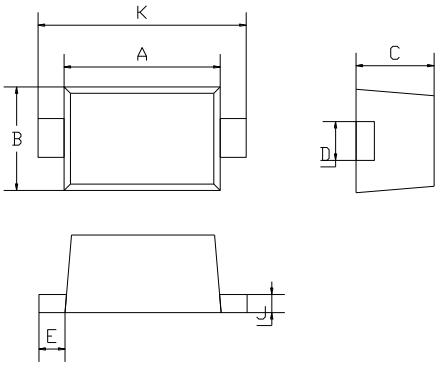

SOD-523		
Dimension	**Min.**	**Max.**
A	1.10	1.30
B	0.70	0.90
C	0.50	0.70
D	0.25	0.35
E	0.15	0.25
J	0.05	0.15
K	1.50	1.70

Package Outline Dimensions (Unit: mm)
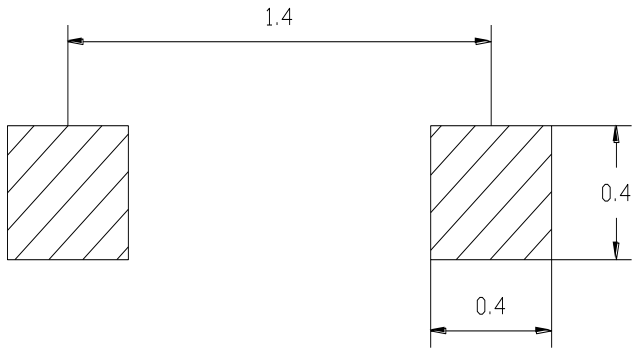
SOD-523