Zener Diode
TBZX584B8V2

Features

HF

- Tight voltage tolerance: ±2%
- Ultra low-profile package well suited for automated assembly
- Moisture sensitivity level 1
- Halogen free
- Qualified to AEC-Q101 standards for high reliability

Mechanical Data

- Case: SOD-523
- Molding Compound: UL Flammability Classification Rating 94V-0
- Terminals: Matte tin-plated leads; solderability-per MIL-STD-202, Method 208

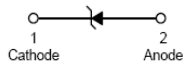

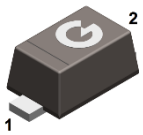

SOD-523

Ordering Information

Part Number	Package	Shipping Quantity	Marking Code
TBZX584B8V2	SOD-523	3000 pcs / Tape & Reel	D5

Thermal Characteristics

Parameter	Symbol	Value	Unit
Power Dissipation	P_D	150	mW
Thermal Resistance Junction-to-Air *1	$R_{\theta JA}$	379	°C/W
Thermal Resistance Junction-to-Case *1	$R_{\theta JC}$	224	°C/W
Thermal Resistance Junction-to-Lead*1	$R_{\theta JL}$	263	°C/W
Operating Junction Temperature Range	T_J	-55 ~ +150	°C
Storage Temperature Range	T_{STG}	-65 ~ +150	°C

Note 1: The data tested by surface mounted on a 15mm * 15mm * 1mm FR4-epoxy P.C.B

Electrical Characteristics (@ T_A = 25°C unless otherwise specified)

Parameter	Symbol	Test Condition	Min.	Typ.	Max.	Unit
Zener Voltage	V_Z	I_{ZT} = 5mA	8.04	8.20	8.36	V
Forward Voltage	V_F	I_F = 10mA	-	-	0.9	V
Maximum Reverse Current	I_R	V_R = 5V	-	-	0.63	μA
Maximum Zener Impedance	Z_{ZT}	I_{ZT} = 5mA	-	-	15	Ω
Maximum Zener Impedance	Z_{ZK}	I_{ZK} = 1mA	-	-	75	Ω
Temperature Coefficient	T_C	I_{ZT} = 5mA	3.2	4.14	6.2	mV/°C

TYPICAL CHARACTERISTICS (@ TA = 25°C unless otherwise specified)

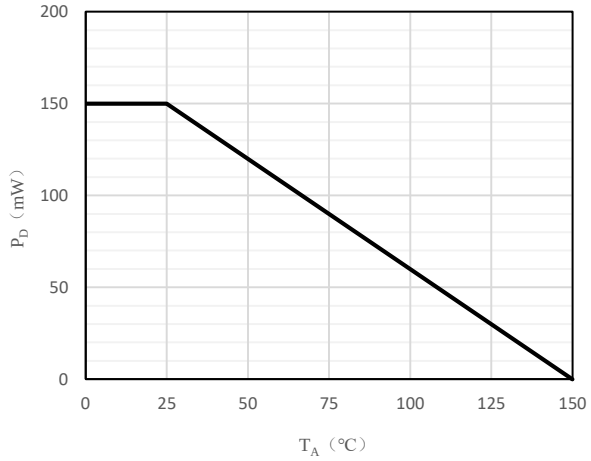

Fig 1 Steady State Power Derating

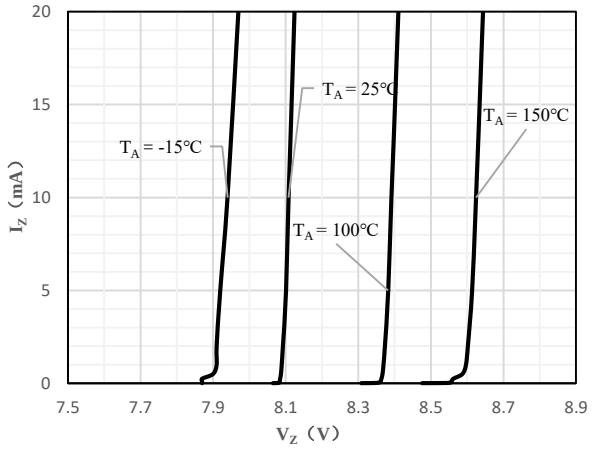

Fig 2 Typical Zener Breakdown Characteristics

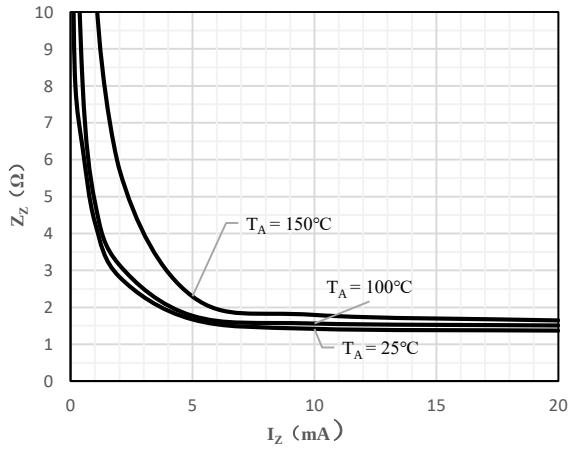

Fig 3 Zener Impedance vs. Zener Current

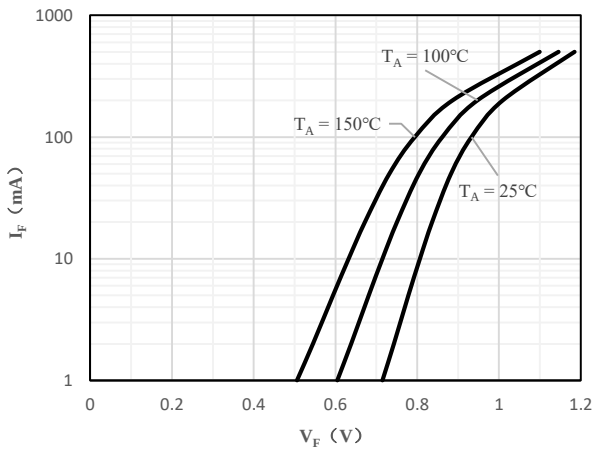

Fig 4 Typical Forward Characteristics

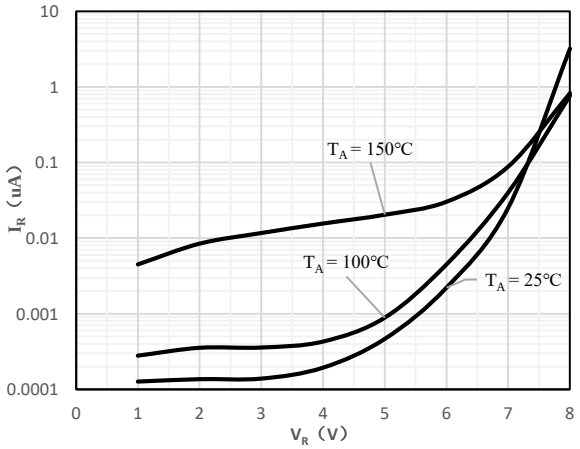

Fig 5 Typical Reverse Characteristics

Package Outline Dimensions (Unit: mm)

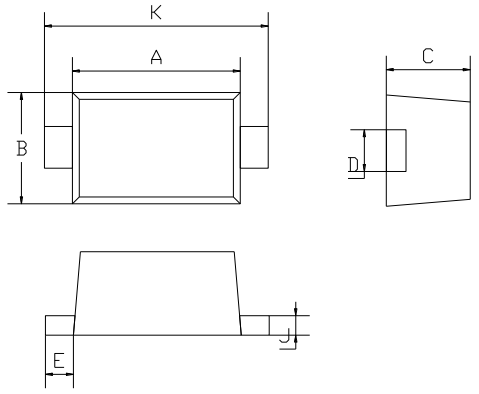

SOD-523		
Dimension	**Min.**	**Max.**
A	1.10	1.30
B	0.70	0.90
C	0.50	0.70
D	0.25	0.35
E	0.15	0.25
J	0.05	0.15
K	1.50	1.70

Package Outline Dimensions (Unit: mm)

SOD-523

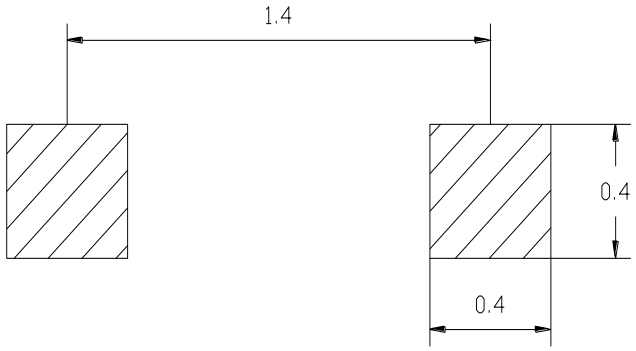

Important Notice

Changzhou Galaxy Century Microelectronics (GME) reserves the right to make changes without further notice to any product information (copyrighted) herein to make corrections, modifications, improvements, or other changes. GME does not assume any liability arising out of the application or use of any product described herein; neither does it convey any license under its patent rights, nor the rights of others.