Features

HF

- Tight voltage tolerance: ±2%
- Ultra low-profile package well suited for automated assembly
- Moisture sensitivity level 1
- RoHS compliant with Halogen-free
- Qualified to AEC-Q101 Standards

Mechanical Data

- Case: SOD-523
- Molding Compound: UL Flammability Classification Rating 94V-0
- Terminals: Matte tin-plated leads; solderability-per MIL-STD-202, Method 208

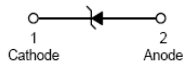

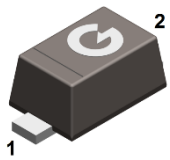

SOD-523

Ordering Information

Part Number	Package	Shipping Quantity	Marking Code
TBZX584B16	SOD-523	3000 pcs / Tape & Reel	L5

Thermal Characteristics

Parameter	Symbol	Value	Unit
Power Dissipation	P_D	150	mW
Thermal Resistance Junction-to-Air *1	$R_{\theta JA}$	379	°C/W
Thermal Resistance Junction-to-Case *1	$R_{\theta JC}$	224	°C/W
Thermal Resistance Junction-to-Lead*1	$R_{\theta JL}$	263	°C/W
Operating Junction Temperature Range	T_J	-55 ~ +150	°C
Storage Temperature Range	T_{STG}	-65 ~ +150	°C

Note 1: The data tested by surface mounted on a 15mm * 15mm * 1mm FR4-epoxy P.C.B

Electrical Characteristics (@ T_A = 25°C unless otherwise specified)

Parameter	Symbol	Test Condition	Min.	Typ.	Max.	Unit
Zener Voltage	V_Z	I_{ZT} = 5mA	15.68	16	16.32	V
Forward Voltage	V_F	I_F = 10mA	-	-	0.9	V
Maximum Reverse Current	I_R	V_R = 11.2V	-	-	0.045	μA
Maximum Zener Impedance	Z_{ZT}	I_{ZT} = 5mA	-	-	40	Ω
Maximum Zener Impedance	Z_{ZK}	I_{ZK} = 1mA	-	-	188	Ω
Temperature Coefficient	T_C	I_{ZT} = 5mA	10.4	12.24	14	mV/°C

TYPICAL CHARACTERISTICS (@ T_A = 25°C unless otherwise specified)

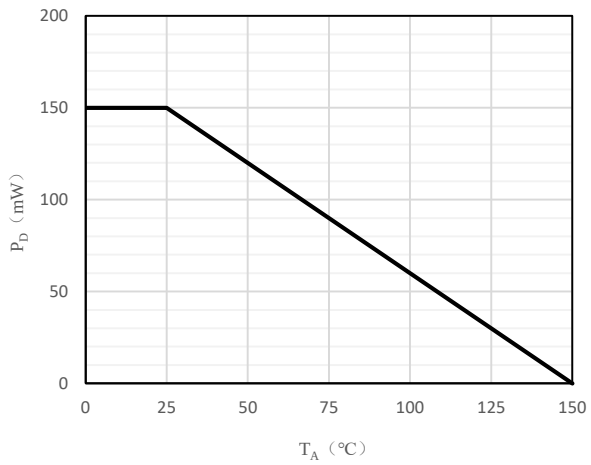

Fig 1 Steady State Power Derating

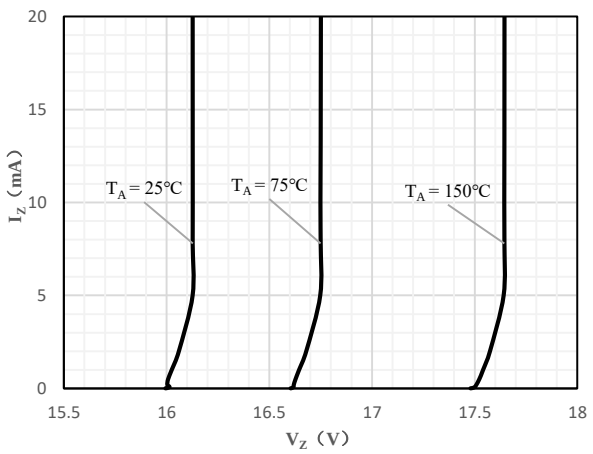

Fig 2 Typical Zener Breakdown Characteristics

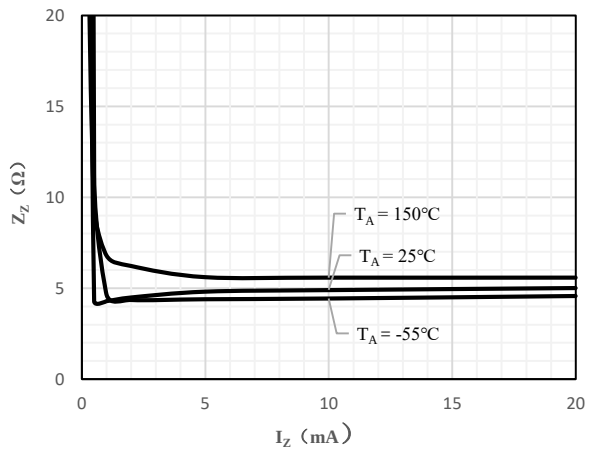

Fig 3 Zener Impedance vs. Zener Current

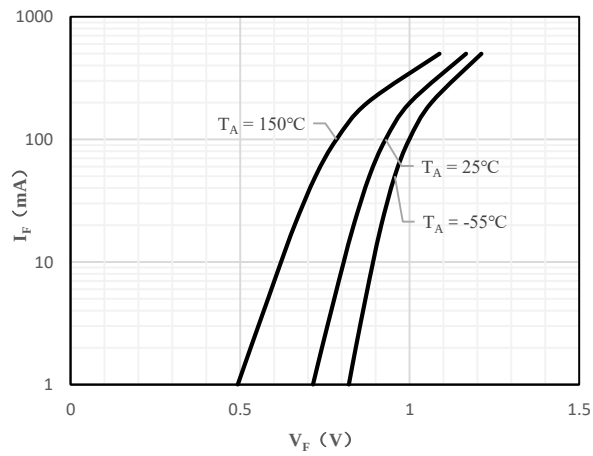

Fig 4 Typical Forward Characteristics

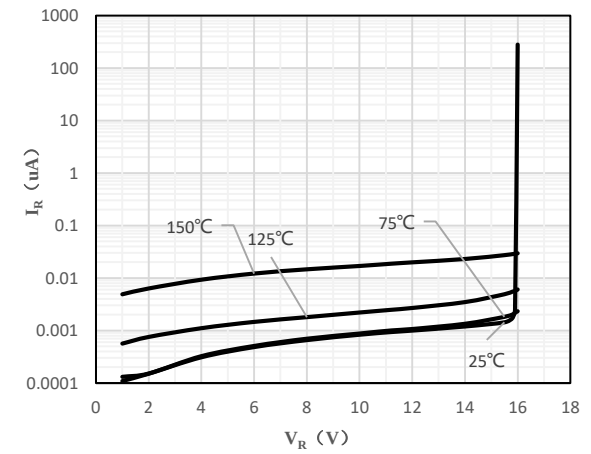

Fig 5 Typical Reverse Characteristics

Package Outline Dimensions (Unit: mm)

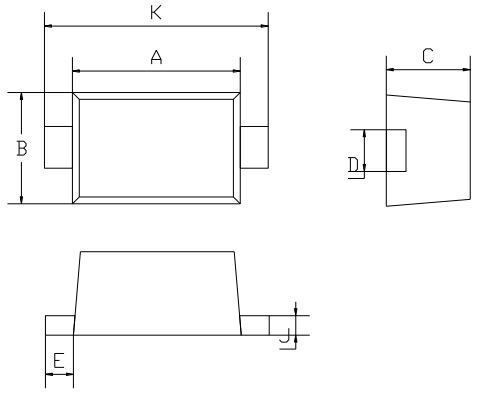

SOD-523		
Dimension	**Min.**	**Max.**
A	1.10	1.30
B	0.70	0.90
C	0.50	0.70
D	0.25	0.35
E	0.15	0.25
J	0.05	0.15
K	1.50	1.70

Package Outline Dimensions (Unit: mm)
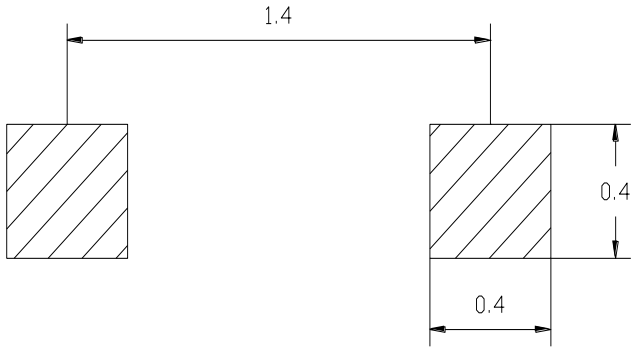
SOD-523