## Features

HF

- Tight voltage tolerance: ±5%
- Ultra low-profile package well suited for automated assembly
- Moisture sensitivity level 1
- RoHS compliant with Halogen-free

## Mechanical Data

- Case: SOD-523
- Molding Compound: UL Flammability Classification Rating 94V-0
- Terminals: Matte tin-plated leads; solderability-per MIL-STD-202, Method 208

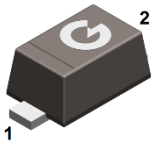


SOD-523

## Ordering Information

| Part Number | Package | Shipping Quantity | Marking Code |
|---|---|---|---|
| BZX584C10 | SOD-523 | 3000 pcs / Tape & Reel | Z9 |

## Thermal Characteristics

| Parameter | Symbol | Value | Unit |
|---|---|---|---|
| Power Dissipation | $P_D$ | 150 | mW |
| Thermal Resistance Junction-to-Air *1 | $R_{\theta JA}$ | 379 | °C/W |
| Thermal Resistance Junction-to-Case *1 | $R_{\theta JC}$ | 224 | °C/W |
| Thermal Resistance Junction-to-Lead *1 | $R_{\theta JL}$ | 263 | °C/W |
| Operating Junction Temperature Range | $T_J$ | -55 ~ +150 | °C |
| Storage Temperature Range | $T_{STG}$ | -65 ~ +150 | °C |

Note 1: The data tested by surface mounted on a 15mm * 15mm * 1mm FR4-epoxy P.C.B

## Electrical Characteristics (@ $T_A$ = 25°C unless otherwise specified)

| Parameter | Symbol | Test Condition | Min. | Typ. | Max. | Unit |
|---|---|---|---|---|---|---|
| Zener Voltage | $V_Z$ | $I_{ZT}$ = 5mA | 9.50 | 10.00 | 10.50 | V |
| Forward Voltage | $V_F$ | $I_F$ = 10mA | - | - | 0.9 | V |
| Maximum Reverse Current | $I_R$ | $V_R$ = 7V | - | - | 0.2 | μA |
| Maximum Zener Impedance | $Z_{ZT}$ | $I_{ZT}$ = 5mA | - | - | 20 | Ω |
| Maximum Zener Impedance | $Z_{ZK}$ | $I_{ZK}$ = 1mA | - | - | 150 | Ω |
| Temperature Coefficient | $T_C$ | $I_{ZT}$ = 5mA | 4.5 | 6.116 | 8.0 | mV/°C |

## TYPICAL CHARACTERISTICS (@ $T_A$ = 25°C unless otherwise specified)

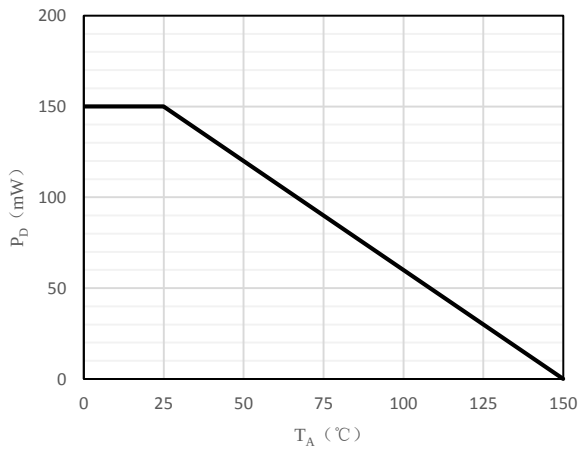


Fig 1 Steady State Power Derating

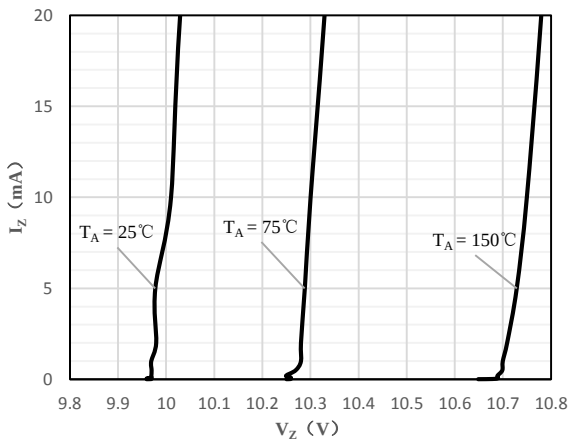


Fig 2 Typical Zener Breakdown Characteristics

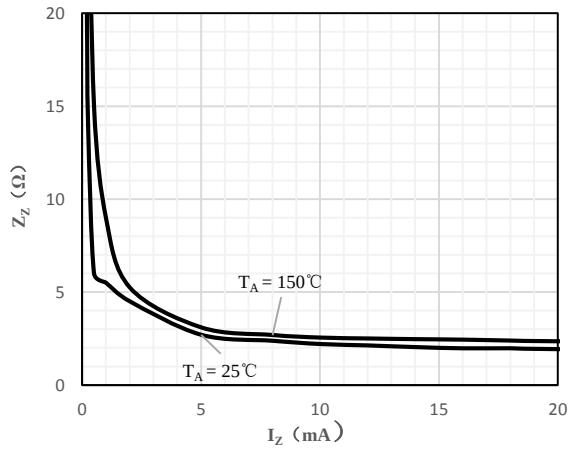


Fig 3 Zener Impedance vs. Zener Current

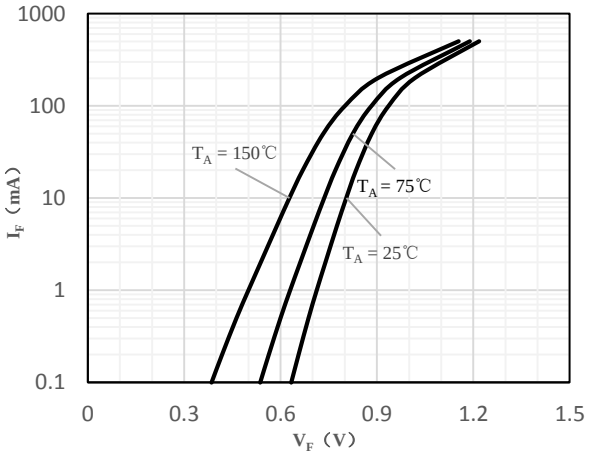


Fig 4 Typical Forward Characteristics

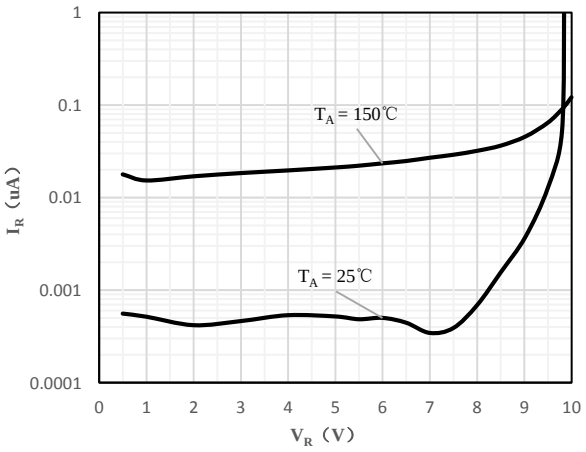


Fig 5 Typical Reverse Characteristics

## Package Outline Dimensions (Unit: mm)

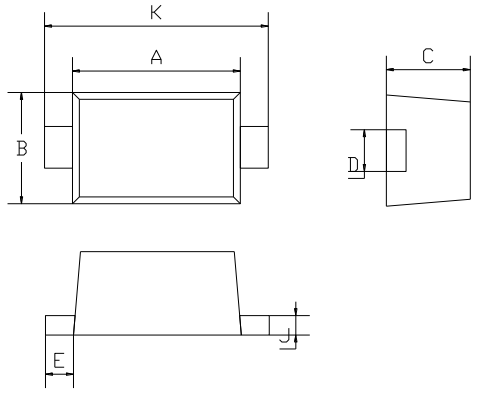


| SOD-523 | | |
|---|---|---|
| **Dimension** | **Min.** | **Max.** |
| A | 1.10 | 1.30 |
| B | 0.70 | 0.90 |
| C | 0.50 | 0.70 |
| D | 0.25 | 0.35 |
| E | 0.15 | 0.25 |
| J | 0.05 | 0.15 |
| K | 1.50 | 1.70 |

## Package Outline Dimensions (Unit: mm)
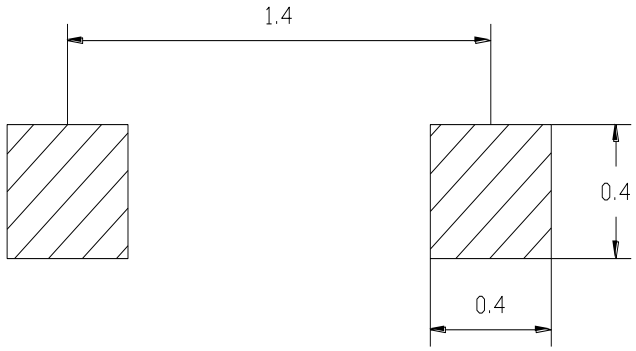
### SOD-523