High Voltage Switching Diode
BAS521

Features

- Ultra small plastic SMD package
- High continuous reverse voltage: 300V
- Repetitive peak forward current: 250 mA
- High switching speed: max. 50ns
- RoHS compliant with Halogen-free

HF

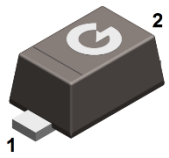

SOD-523

Mechanical Data

- Case: SOD-523
- Molding Compound: UL Flammability Classification Rating 94V-0
- Terminals: Matte tin-plated leads; solderability-per MIL-STD-202, Method 208

Ordering Information

Part Number	Package	Shipping Quantity	Marking Code
BAS521	SOD-523	3000 pcs / Tape & Reel	L4

Maximum Ratings (@ T_A = 25°C unless otherwise specified)

Parameter	Symbol	Value	Unit
Peak Repetitive Peak Reverse Voltage	V_{RRM}	300	V
DC Blocking Voltage	V_R	300	V
Continuous Forward Current	I_F	250	mA
Peak Forward Surge Current, t_p = 1μs	I_{FSM}	4.5	A
Peak Forward Surge Current, t_p = 8.3ms		2	A
Repetitive Forward Current, t_p = 1ms	I_{FRM}	1	A

Thermal Characteristics

Parameter	Symbol	Value	Unit
Power Dissipation (T_L = 25°C) *1	P_D	500	mW
Thermal Resistance Junction-to-Air *1	$R_{\theta JA}$	350	°C/W
Thermal Resistance Junction-to-Case *1	$R_{\theta JC}$	230	°C/W
Thermal Resistance Junction-to-Lead *1	$R_{\theta JL}$	250	°C/W
Operating Junction Temperature Range	T_J	-65 ~ +150	°C
Storage Temperature Range	T_{STG}	-65 ~ +150	°C

Note 1: The data tested by surface mounted on a 15mm * 15mm * 1mm FR4-epoxy P.C.B

Electrical Characteristics (@ T_A = 25°C unless otherwise specified)

Parameter	Symbol	Test Condition	Min.	Typ.	Max.	Unit
Reverse Breakdown Voltage	$V_{(BR)R}$	I_R = 100μA	300	-	-	V
Forward Voltage	V_F	I_F = 100mA	-	-	1.10	V
Maximum Peak Reverse Current	I_R	V_R = 250V, T_J = 25°C	-	-	0.15	μA
		V_R = 250V, T_J = 150°C	-	-	100	μA
Total Capacitance	C_J	V_R = 0V, f = 1.0MHz	-	-	5	pF
Reverse Recovery Time	t_{rr}	I_F = I_R = 30mA I_{rr} = 0.1×I_R, R_L = 100Ω	-	-	50	ns

Ratings and Characteristics Curves (@ T_A = 25°C unless otherwise specified)

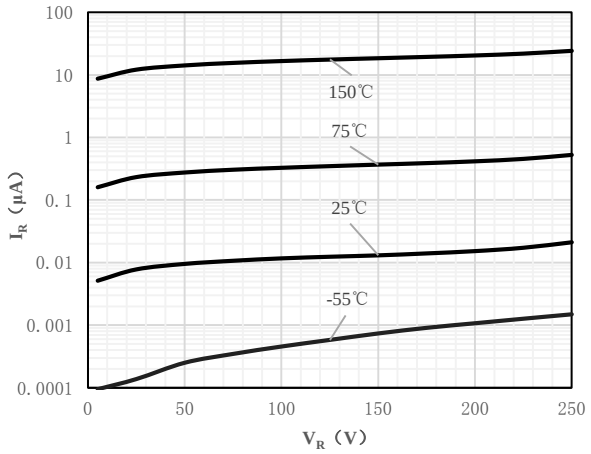

Fig 1 Typical Reverse Characteristic

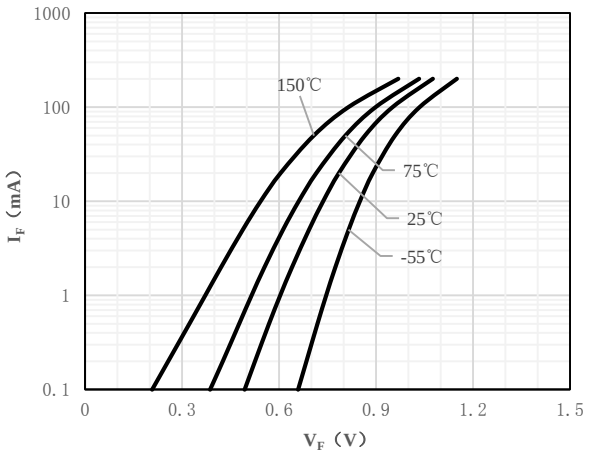

Fig 2 Typical Forward Characteristics

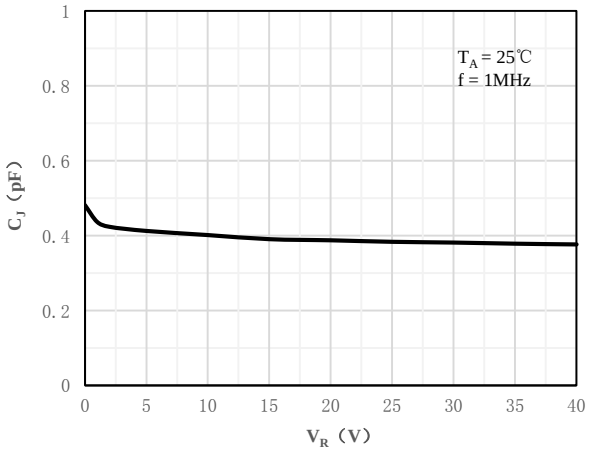

Fig 3 Capacitance vs. Reverse Voltage

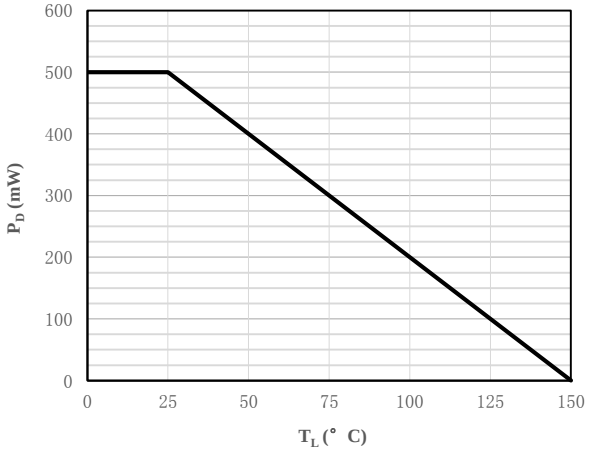

Fig 4 Forward Current Derating Curve

Package Outline Dimensions (Unit: mm)

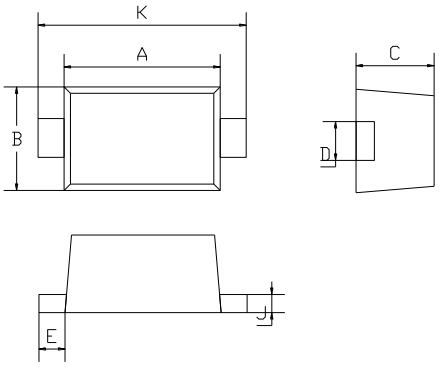

SOD-523		
Dimension	**Min.**	**Max.**
A	1.10	1.30
B	0.70	0.90
C	0.50	0.70
D	0.25	0.35
E	0.15	0.25
J	0.05	0.15
K	1.50	1.70

Package Outline Dimensions (Unit: mm)
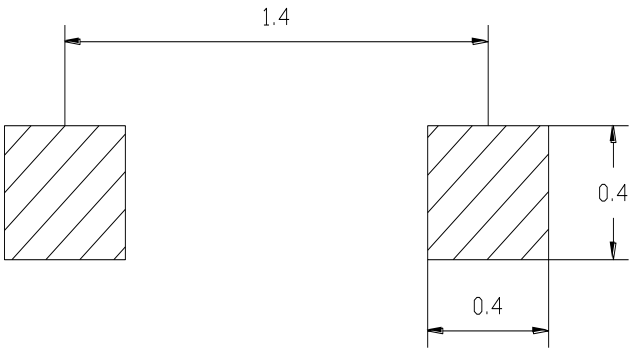
SOD-523